TYPICAL ELEVATION

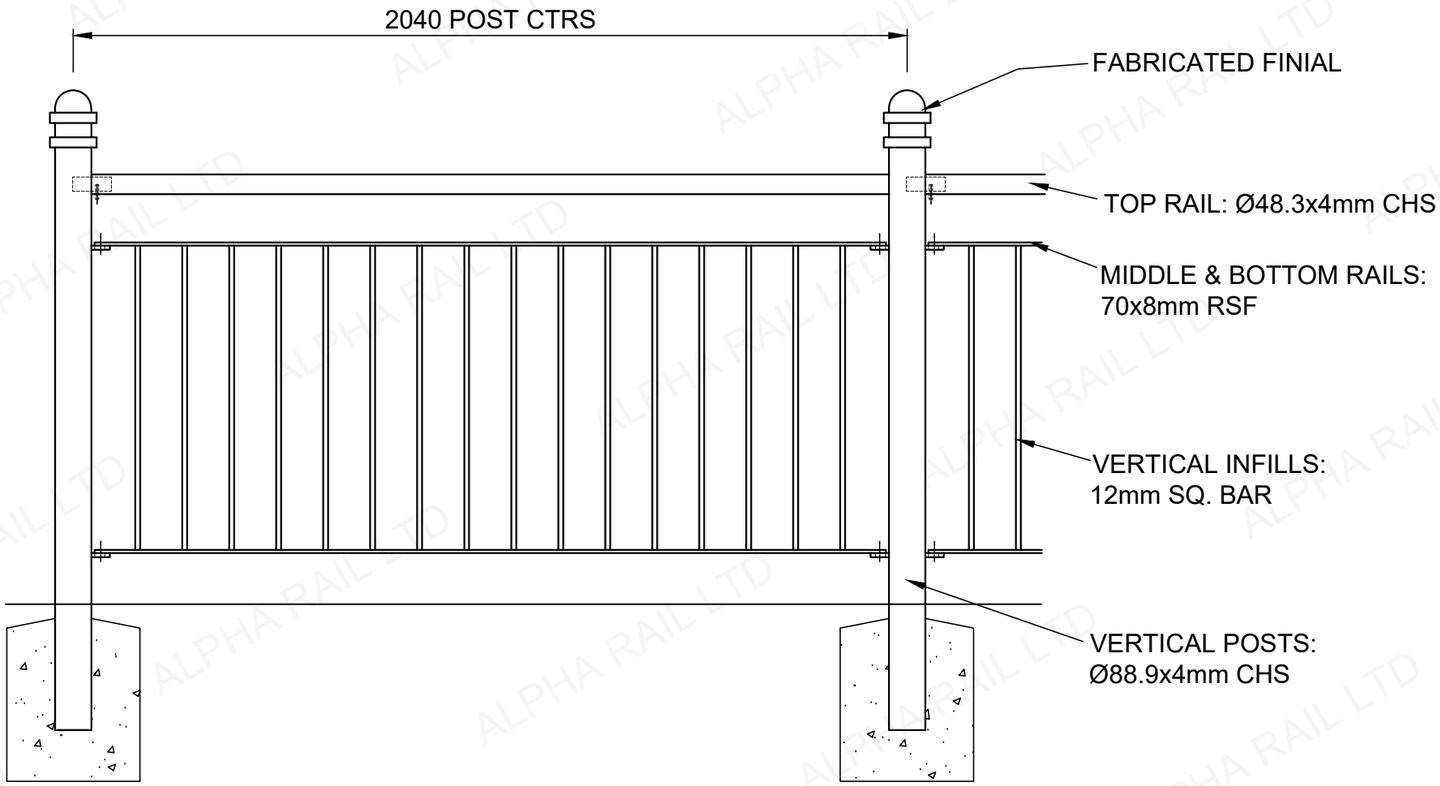

PLAN VIEW

INFILLS SET TO STAGGERED ARRANGEMENT

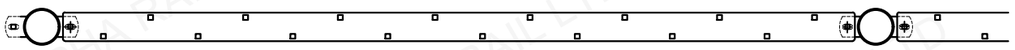

DRAWING. 1112/001	ALPHA RAIL RAILINGS . GATES . GUARDRAIL
TITLE. DG1112 PANEL	