ELEVATION

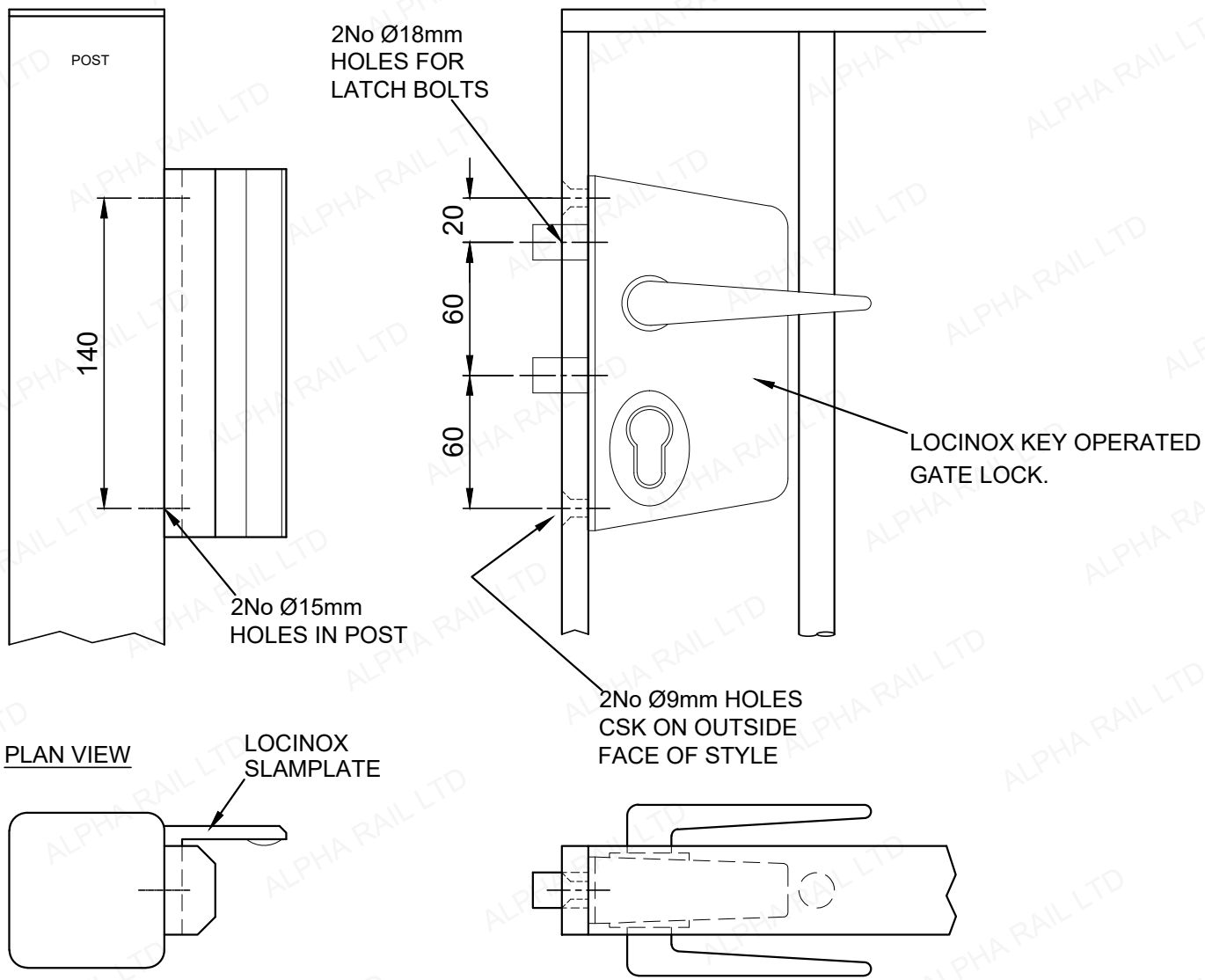

DRAWING.	LOCK
TITLE.	LOCINOX LATCH

ALPHA RAIL
RAILINGS . GATES . GUARDRAIL